SURFACE INLET

TXDOT STANDARD

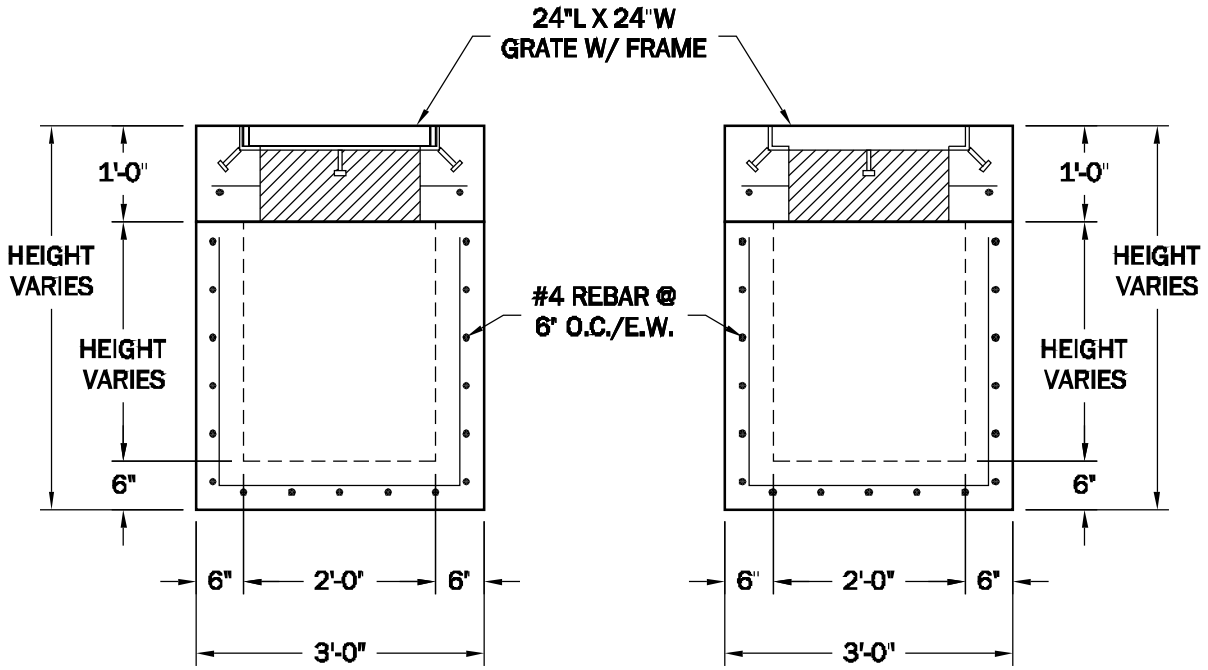

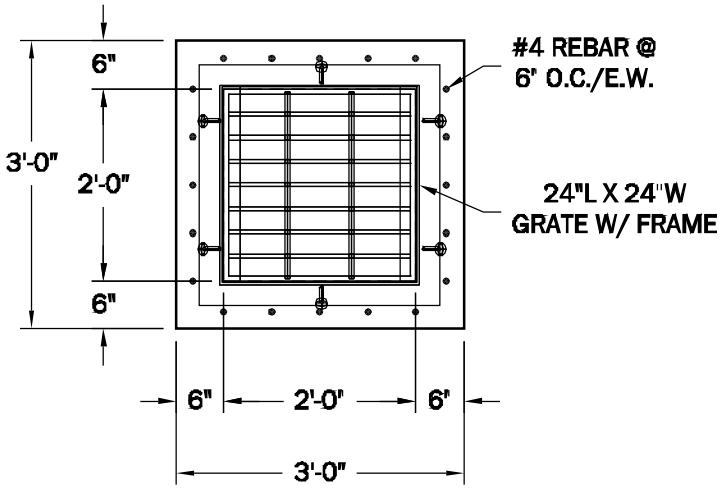

NOTE:
LARGER INLETS AVAILABLE UPON REQUEST.

WESTERN
PRECAST CONCRETE INC.
QUALITY PRODUCTS AND SERVICE SINCE 1946

SURFACE INLET	
9101 Roseway	(915) 859-9362